DATE RECEIVED	FEE		CERT. NO.	EXPIRES	CLASS

DO NOT WRITE ABOVE THIS LINE

STATE OF NEW YORK - DEPARTMENT OF LABOR

DIVISION OF SAFETY AND HEALTH

Radiological Health Unit

P.O. Box 683, New York, NY 10014-0683

APPLICATION FOR CERTIFICATE OF COMPETENCE FOR OPERATOR OF MOBILE LASER

1. LAST NAME OF APPLICANT	FIRST	MIDDLE	2. SOCIAL SECURITY NUMBER
			3. DEPT OF MOTOR VEHICLES LICENSE OR ID NUMBER

4. PERMANENT ADDRESS - WHERE YOU ARE CERTAIN OF BEING REACHED

4A. NUMBER AND STREET		4B. COUNTY
4C. CITY, TOWN, VILLAGE	4D. STATE	4E. ZIP CODE

4. PLACE OF RESIDENCE FOR NEXT SIX MONTHS IF OTHER THAN SHOWN IN 3 ABOVE

5A. NUMBER AND STREET		5B. COUNTY
5C. CITY, TOWN, VILLAGE	5D. STATE	5E. ZIP CODE

6. DATE OF BIRTH	7. WEIGHT	8. HEIGHT	9. COLOR EYES	10. COLOR HAIR

11. DO YOU HAVE A PHYSICAL HANDICAP OR ILLNESS, SUCH AS EPILEPSY, HEART DISEASE, OR AN UNCORRECTED DEFECT IN VISION OR HEARING, THAT MIGHT DIMINISH YOUR COMPETENCE IN RELATION TO THE HANDLING OR USE OF LASERS?

☐ NO ☐ YES . . . . IF YES, EXPLAIN BELOW:

12. PLEASE CHECK **ONE** BOX TO INDICATE THE CATEGORY OF THE CERTIFICATE OF COMPETENCE REQUIRED:

☐ Class A - Certificate - The holder of this certificate may operate any low - intensity mobile laser.

☐ Class B - Certificate - The holder of this certificate may operate any high - intensity or low - intensity mobile laser.

13. ☐ RENEWAL APPLICANT - Check here and sign reverse side of form.

☐ FIRST TIME APPLICANT - Check here and complete All of reverse side of form.

14. WORK EXPERIENCE:

List Below Your Work Experience in the Handling, Use and Operation of Mobile Lasers (Use Additional Sheet, if Necessary)

NOTE: Letters from your employers verifying experience claimed will expedite processing of your application

14a. DATE(S) EMPLOYED IN THE HANDLING, USE AND OPERATION OF MOBILE LASERS	14b. EMPLOYER'S NAME, MAILING ADDRESS AND LASER SAFETY OFFICER	14c. LASERS USED		14d. BRIEFLY DESCRIBE YOUR DUTIES
		MFG.	MODEL NO.	
FROM:				
TO:	LSO.			
FROM:				
TO:	LSO.			
FROM:				
TO:	LSO.			
FROM:				
TO:	LSO.			
FROM:				
TO:	LSO.			
FROM:				
TO:	LSO.			
FROM:				
TO:	LSO.			

15. LASER TRAINING COURSE(S)

15a. DATE(S)	15b. SPONSOR OF TRAINING COURSE AND COURSE DIRECTOR	15c. LOCATION OF TRAINING	15d. NAME OF INSTRUCTOR	15e. STATEMENT OF COMPLETED COURSE-SENT BY COURSE DIRECTOR	
FROM:				YES	NO
TO:					
FROM:					
TO:					
FROM:					
TO:					

16. **I hereby certify that all the above statements are true to the best of my knowledge and belief.**
I authorize the DOL and the DMV to produce an ID card bearing my DMV photo. I understand that DOL will send this card to the address I maintain with DOL. I also understand that DOL and DMV will use my photo to manufacture all my subsequent ID cards for as long as I maintain my license/certification with the DOL.

(SIGNATURE) (DATE)

IMPORTANT NOTICE REGARDING FEE: A non-refundable fee of **$60.00** will be charged prior to the issuance of your certificate. You will be notified when the fee must be paid. **SEND NO MONEY AT THIS TIME**

APPENDIX TO A LICENSE APPLICATION

DIRECTIONS: [The child support obligations (New York State General Obligations Law) does not apply to corporations.]

1. Complete the CERTIFICATION section of this form if you are applying for a license or license renewal. The form must be notarized.
2. Complete the RECERTIFICATION section of this form if you have previously submitted an Appendix to a License Application, had child support obligations that were not being met, and are now applying for a renewal of your license. The form must be notarized.

APPLICANT	
a. Name	b. Social security number
c. Telephone number	d. List the type of business license being requested
e. Title	f. Business name (if applicable)

CERTIFICATION

ARE YOU UNDER AN OBLIGATION TO PAY CHILD SUPPORT? ☐ **YES** ☐ **NO**

If yes, complete items 1 - 4.

1. I am four months or more in arrears in the payment of child support . ☐ TRUE ☐ FALSE
2. I am making payments by income execution or by court agreed payment or repayment plan or by plan agreed to by the parties. ☐ TRUE ☐ FALSE
3. My child support obligation is the subject of a pending court proceeding. ☐ TRUE ☐ FALSE
4. I am receiving public assistance or supplemental security income. ☐ TRUE ☐ FALSE

RECERTIFICATION

As required by Section 3-503.3 of the General Obligations Law, I am submitting the following **RECERTIFICATION:**

I am no longer in arrears in the payment of child support. ☐ TRUE ☐ FALSE

I am making payments by income execution or by court agreed payment or repayment plan or by plan agreed to by the parties or repayment plan with the appropriate support collection unit. ☐ TRUE ☐ FALSE

My child support obligation is the subject of a pending court proceeding. ☐ TRUE ☐ FALSE

I am receiving public assistance or supplemental security income. ☐ TRUE ☐ FALSE

I CERTIFY THAT AS OF THE DATE MY LICENSE APPLICATION IS FILED I AM UNDER NO OBLIGATION TO PAY CHILD SUPPORT OR THAT I MEET AT LEAST ONE OF THE REQUIREMENTS LISTED ABOVE.

SWORN TO BEFORE ME THIS

_____ DAY OF _____, _____ SIGNATURE _____

_____ TITLE (If any) _____
(NOTARY PUBLIC)

PLEASE REVIEW THE INFORMATION PROVIDED ON THE REVERSE

CHILD SUPPORT OBLIGATIONS

Section 3 - 503 of the New York State General Obligations Law requires the following:

> "2. Every applicant for a license or renewal thereof shall certify in the application in a written statement under oath, duly sworn and subscribed, that as of the date the application is filed he or she is (or is not) under an obligation to pay child support and that if he or she is under such an obligation, that he or she does (or does not) meet one of the following requirements..."
>
> A "LICENSE" means any certificate, license, permit or grant of permission required by the laws of this state, its political subdivisions or instrumentalities as a condition for the lawful practice of any occupation, employment, trade, vocation, business, or profession, and shall also include any registration required by law or agency regulation as a condition for such lawful practice.

PERSONS WHO ARE FOUR MONTHS OR MORE IN ARREARS IN CHILD SUPPORT OR WHO HAVE FAILED TO COMPLY WITH A SUMMONS, SUBPOENA OR WARRANT RELATING TO A PATERNITY OR CHILD SUPPORT PROCEEDING MAY BE SUBJECT TO SUSPENSION OF THEIR BUSINESS, PROFESSIONAL AND/OR DRIVER'S LICENSES.

Section 3-503.3 states that an applicant who has child support obligations and who meets one of the requirements in items 1 - 4 may have their license, permit, registration, certificate, approval, etc., issued or renewed.

"...but such license shall expire in six months unless before that time the applicant submits a written certification under oath, duly sworn and subscribed that he or she:

a. is no longer in arrears in the payment of child support ; or

b. is making payments by income execution or by court agreed payment or repayment plan or by plan agreed to by the parties or repayment plan with the appropriate support collection unit; or

c. the child support obligation is the subject of a pending court proceeding; or

d. he or she is receiving public assistance or supplemental security income.

Upon the submission of such certification, the expiration date of such license shall be governed by the agency's customary practice and no fee, in addition to the initial license application fee, shall be charged unless the six month period has expired.

Section 3-503.5, states in part,

"... THAT THE INTENTIONAL SUBMISSION OF FALSE WRITTEN STATEMENTS FOR THE PURPOSE OF FRUSTRATING OR DEFEATING THE LAWFUL ENFORCEMENT OF SUPPORT OBLIGATIONS IS PUNISHABLE PURSUANT TO SECTION 175.35 OF THE PENAL LAW."

STATE OF NEW YORK
DEPARTMENT OF LABOR
DIVISION OF SAFETY AND HEALTH
PO BOX 683
NEW YORK, NY 10014-0705

MOBILE LASER OPERATOR'S CERTIFICATE OF COMPETENCE
INFORMATION AND INSTRUCTIONS FOR APPLICANTS

Section 482 of the General Business Law requires persons who operate a mobile laser to hold a certificate of competence issued by the Commissioner of Labor except:

(1) professional engineers and land surveyors licensed to practice in the State of New York, and

(2) operators of mobile lasers used exclusively in research and development.

REQUIREMENTS

AGE	applicant must be at least 18 years old.
PHYSICAL CONDITION	an applicant who suffers from an uncontrolled physical handicap or illness, (such as epilepsy, heart disease, or from an uncorrected defect in vision or hearing) which might diminish the applicant's competence in the operation of laser equipment, will not be certified by the Commissioner.
EXPERIENCE	applicant must have at least one year of practical experience in the operation of a laser. Such experience must include a knowledge of laser safety precautions. experience may be obtained by a trainee who is designated by and working under the direct personal supervision of a person holding a certificate of competence. NOTE: The Commissioner may waive the one year experience requirement if the applicant submits evidence of successful completion of a laser operator training course acceptable to the Commissioner. See EXCEPTIONS below.
GENERAL EXAMINATION	each applicant for a certificate of competence will, and each applicant for a renewal of such certificate may, be required by the Commissioner to take an appropriate general examination. See EXCEPTIONS below.
EXCEPTIONS	the Commissioner may issue a certificate of competence or a renewal thereof without examination of any kind to any applicant who has successfully completed a four-year course of study at a college or university which included study of laser and laser safety precautions and such course is acceptable to the Commissioner.

SEE REVERSE FOR ADDITIONAL INFORMATION

APPLICATION	prepare two copies of the application; applications may be obtained from the Division of Safety and Health, Radiological Health Unit, P.O. Box 683, New York, NY 10014-0705.
PHOTOGRAPHS	two photographs size 1½" x 1½" taken without the last 30 days are required.
FEE	a non-refundable fee of **$60.00** will be charged prior to the issuance of a certificate. You will be notified when the fee must be paid. SEND NO MONEY AT THIS TIME. original application, the fee due and the two photographs to the Division of Safety and Health, Radiological Health Unit, P.O. Box 683, New York, NY 10014-0705; retain one copy of the application for your files. NOTE: The processing of your application will be expedited if you submit with your application a letter from each employer substantiating the work experience indicated
HOW LONG IT TAKES	certification examinations are given annually throughout the state and more often, if requested, at Laser Training Course Centers. After taking the examination applicants will be notified of the result without approximately 6-8 weeks.

GENERAL INFORMATION

TERM OF CERTIFICATE	the certificate is valid for three years from the date of issuance.
TYPE OF CERTIFICATE	Class A - the holder of this certificate may operate any high-intensity or low-intensity mobile laser. Class B - the holder of this certificate may operate any high-intensity or low-intensity mobile laser.
CARRY CERTIFICATE	carry the certificate at all times when working with or operating any mobile laser. Failure to produce such certificate upon request by the Commissioner shall be considered presumptive evidence that the operator is not certified.
CHANGE OF ADDRESS	you must notify the Division of Safety and Health, License and Certificate Unit, P.O. Box 683, New York, NY 10014-0705, of any change in your address. Failure to send in this information may prevent delivery of your certificate or your renewal application.
RENEWAL	file with the License and Certificate Unit a renewal application, the fee and two photographs between three to six months prior to the date of expiration.
DENIAL OF CERTIFICATE	any applicant whose application for a certificate of competence has been denied by the Commissioner may, upon written request to the Commissioner, have a hearing before the examination board. Such written request must be made within 30 days after receipt of the notice of denial.

SAFE USE OF LOW INTENSITY LASER DEVICES IN INDUSTRY

STATE OF NEW YORK
DEPARTMENT OF LABOR

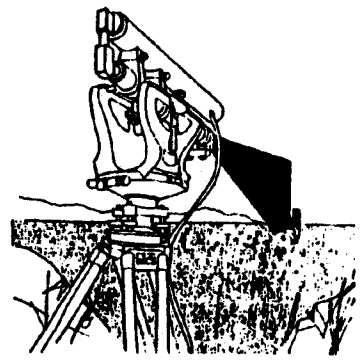

Dredging. Lasers project a vertical or horizontal fan beam that defines a straight line for miles. To stay on line, the barge operator looks back at the vertical laser fan; the reference beam stays where you set it. The same principle used for controlling trenching machines, determining slopes on earth-fill dams, topographical work, etc.

Figure 3

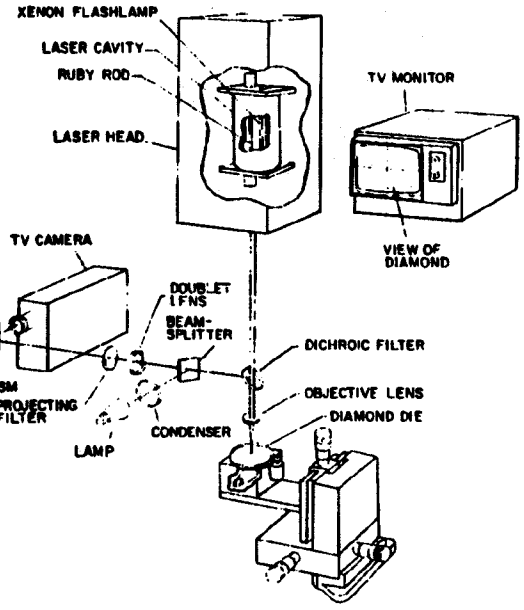

Figure 4: Schematic Diagram of a High Intensity Laser Tool used for Drilling Hard Materials

(Figure 4 furnished through the courtesy of the Raytheon Company, Waltham, Massachusetts 02154)

Figures 1 through 3 furnished through the courtesty of Spectra Physics, Mountain View, California 94040.

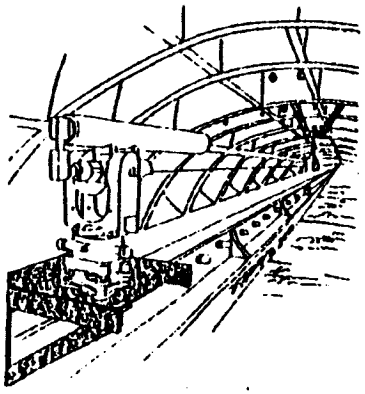

Figure 1

Tunneling and mining. The engineering laser projects a pencil-thin beam of red light ideal for tunnels, mine drifts, shafts, cross cuts, raises, inclines, etc. Ideal for controlling moles and mining machines. Check tights, align liner plate, guide concreting, lay track, etc. Can be used on a tripod for fast set-up or semi-permanently mounted near the crown.

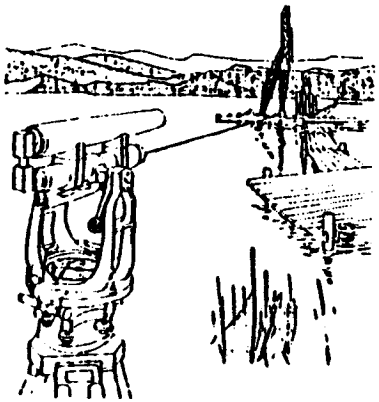

Figure 2

Pile Driving. Low rows of pilings can be driven accurately. Continuous laser beams projects precisely on axis established by the transit. Provides visible reference spot for piling placement, then assures uniform cutoff. No need for radio communication or signals. Also, useful for highway median barriers, fencing, overpasses, bridges, etc. Adding a fan lens accessory converts the engineering laser to a long-range alignment tool.

SAFE USE OF LOW INTENSITY LASER DEVICES IN INDUSTRY

I. DESCRIPTION AND CHARACTERISTICS OF LASERS

The term "laser" is an acronym for "Light Amplification by Stimulated Emission of Radiation". The laser is a device which produces, amplifies and emits a highly coherent beam of electromagnetic radiation or "light". The coherent output of a laser contains a narrow frequency band of light, which travels in one direction with a minimum of divergence whereas ordinary light, such as that produced by an incandescent bulb, is emitted in all directions and at many frequencies to produce white light.

In general, where the laser beam is not of sufficient intensity to cause a reddening of the skin on contact, the device is considered to be one of low intensity. The most commonly used low intensity laser in industry is the helium-neon gas laser which emits a red-colored beam. However, most colors of the visible spectrum can be produced through the use of different lasing media. In addition, invisible infra-red or ultra violet beams can be produced.

The laser possesses four unique characteristics which determine how it may be used industrially. The same characteristics, which appear below, constitute the factors which make human exposure to laser beams potentially hazardous.

1. <u>DIRECTIONALITY</u>. Laser beams can be projected over great distances in a single direction without appreciable attenuation of intensity. For example, it has been possible to project laser light to the moon and to detect the reflected beam on earth.

2. <u>MONOCHROMATICITY</u>. Laser light is produced in a narrow frequency band resulting in a single color light beam of very high purity.

3. <u>COHERENCE</u>. Unlike the common light sources, such as incandescent light bulbs which emit light in a broad frequency band in all directions, lasers emit light in a narrow frequency bank

in a single direction. This term combines the characteristics of directionality and monochromaticity. Coherence makes lasers useful in the communications industry.

4. INTENSITY. Laser light is more intense than that from any other light source because laser light is distributed over a smaller area than any equivalent source of ordinary light.

II. INDUSTRIAL APPLICATION OF LASERS

The four broad areas of industrial laser use are as follows:

1. *ALIGNMENT.* The laser beam is used as a reference line or plane in this application. As such it is useful in such construction projects as pipe-laying, tunnel drilling, bridge and road building, and in fixing levels for ceiling and floor construction.

2. *DISTANCE MEASUREMENT.* The measurement of distance can be accomplished cheaply, efficiently, quickly and accurately with the use of low intensity lasers. These devices are being used increasingly in place of conventional surveying apparatus.

3. *POWER.* Lasers of high intensity can be used as power sources in such industrial operations as drilling, cutting, welding, trimming and scribing.

4. *COMMUNICATION.* Although laser communication techniques are in a developmental state, the use of the laser in this application may eventually outstrip all other applications.

Figures 1 through 3 illustrate typical laser devices used primarily for distance measurement and alignment. Figure 4 is a schematic diagram of a high intensity laser that is used as a power source for drilling through hard materials, such as diamonds and titanium alloys.

III. BIOLOGICAL EFFECTS OF EXPOSURE TO LASER RADIATION

Medical research has shown that exposure of the eye or skin to laser radiation may result in the production of a retinal or skin burn. Because of the ability of the lens of the eye to concentrate light in focusing images on the retina, only a miniscule fraction of laser light that would produce a skin burn

is needed to produce a retinal burn. While skin burns are reversible and heal, retinal burns can be irreversible and result in permanent eye damage. The eye is the organ that is especially susceptible to injury and therefore care must be exercised to ensure that the eye is not exposed to laser radiation.

The degree of hazard is dependent upon the intensity of the laser; classification systems have been developed to rank lasers by degree of hazard, and establish safeguards for each class. For example, the use of specially designed safety eyewear to protect the eyes is mandatory for those individuals who are exposed to laser beams exceeding certain intensities. With respect to high intensity lasers, the complete enclosure of the laser beam is ordinarily required for personnel protection.

IV. PROTECTION OF WORKERS AGAINST LASER HAZARDS

New York Industrial Code Rule 50, "Lasers", contains provisions governing the safe exposure of workers to all lasers utilized in industrial applications. The Industrial Code Rule segregates lasers into three broad classes as follows:

1. Exempt Lasers. Lasers in this classification are exempt from the requirements of the Code Rule.

2. Low Intensity Lasers. These are lasers that are certified to meet FDA requirements for four classes of low intensity lasers.

3. High Intensity Lasers. All high intensity lasers and certain low intensity lasers which are used in research and development applications will require registration with the New York State Labor Department's *Division of Safety and Health.*

All lasers used in the construction industry at present are low intensity devices, certified by the manufacturer to meet FDA requirements. Lasers for use in the construction industry normally will be classified as "mobile" rather than "fixed", such as those used in a factory installation. The fixed laser designation applies to those lasers confined to a single room or area within a plant. The Department of Labor may inspect any company that possesses a laser for the purpose of evaluating compliance with Code Rule 50. Therefore, every company using lasers should be familiar with the Rule's requirements and ensure that they are implemented and documented.

LASER TRAINING COURSES

CLASS A CERTIFICATE (LOW INTENSITY LASERS)

Joseph A. Zappone / Peter Nardolillo
Tri-Cities Laborers'
Training Program
666 Wemple Road
Glenmont New York 12077
(518) 426-0290

John Anselmo
Institute of Design & Construction
141 Willoughby Street
Brooklyn, New York 11201
(718) 855-3661

Martin Daly, Director
New York District Council of Carpenters
Labor Technical College
395 Hudson Street
(Entrance at Clarkson St.)
New York, NY 10014
(212) 727-2224

Spectra-Physics
1250 West Middlefield Road
Mountain View, CA 94040
(415) 961-2550

CLASS B CERTIFICATE (LOW AND HIGH INTENSITY LASER)

Norman Ballard
Rarefied Media Inc.
337 West 76th Street
New York, NY 10023
(212) 874-1431

Theodore Marotta, Assistance Professor
Hudson Valley Community College
80 Vandenburgh Ave, Hudson Hall
Troy, New York 12180
(518) 283-1100

Rockwell Laser Industries
7754 Camargo Road
P O Box 43010
Cincinnati, OH 45243
(513) 271-1568

F.J. Bradley
Health Physics Consultant
605 East 82nd Street, #2H
New York, NY 10028
(212) 628-6580